Structural FEA: Engineering Design Project

Analyzed File:	3D Brachistochrone Model (midterm).ipt
Autodesk Inventor Version:	2026.2 (Build 302298010, 298A)
Creation Date:	3/10/2026, 8:03 PM
Study Authors:	Juniper-Marie Rahal Chase Call Marc Gomez Katie Mitchell
Summary:	

Static Analysis:1

General objective and settings:

Design Objective	Single Point
Study Type	Static Analysis
Last Modification Date	3/10/2026, 7:57 PM
Model State	[Primary]
Detect and Eliminate Rigid Body Modes	No

iProperties

Summary

Authors	Juniper-Marie Rahal Chase Call Marc Gomez Katie Mitchell

Project

Part Number	3D Brachistochrone Model
Designers	Juniper-Marie Rahal Chase Call Marc Gomez Katie Mitchell
Estimated Cost	$3.62+
Creation Date	3/5/2026

Status

Design State	Midterm Model

Physical

Material	PLA Plastic
Density	1.24 g/cm^3
Mass	1.87305 kg
Area	1668.79 cm^2
Volume	1510.52 cm^3
Center of Gravity	x=4.69668 cm y=2.43345 cm z=-8.18225 cm

Note: Physical values could be different from Physical values used by FEA reported below.

Mesh settings:

Avg. Element Size (fraction of model diameter)	0.1
Min. Element Size (fraction of avg. size)	0.2
Grading Factor	1.5
Max. Turn Angle	60 deg
Create Curved Mesh Elements	Yes

Material(s)

Name	PLA Plastic	
General	Mass Density	1.24 g/cm^3
	Yield Strength	60 MPa
	Ultimate Tensile Strength	50 MPa
Stress	Young's Modulus	2.24 GPa
	Poisson's Ratio	0.38 ul
	Shear Modulus	0.811594 GPa
Part Name(s)	3D Brachistochrone Model (midterm).ipt	

Operating conditions

Force:1

Load Type	Force
Magnitude	196.200 N
Vector X	0.000 N
Vector Y	-196.200 N
Vector Z	0.000 N

Selected Face(s)

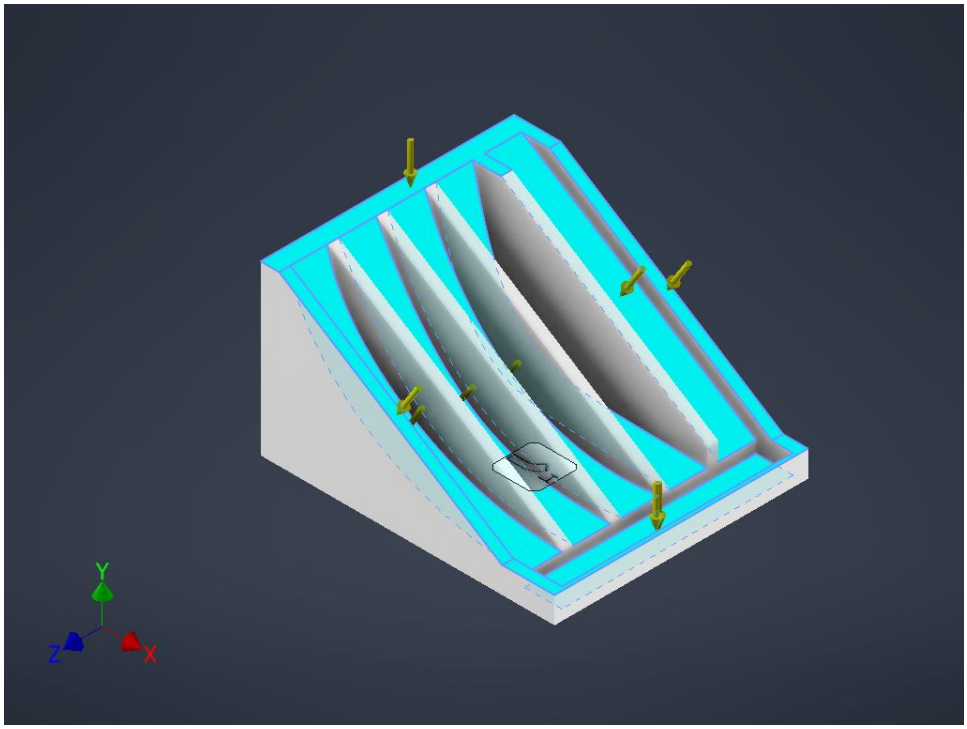

Fixed Constraint:1

Constraint Type	Fixed Constraint

Selected Face(s)

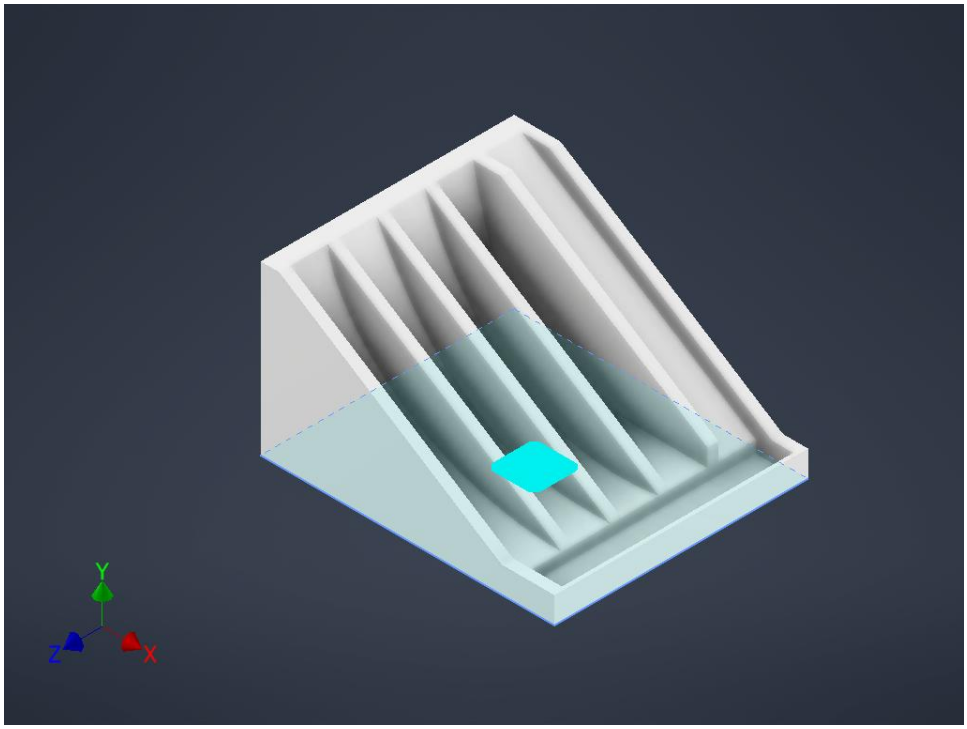

Results

Reaction Force and Moment on Constraints

Constraint Name	Reaction Force		Reaction Moment	
	Magnitude	Component (X,Y,Z)	Magnitude	Component (X,Y,Z)
Fixed Constraint:1	180.626 N	78.3451 N	4.77775 N m	0.0382404 N m
		162.751 N		0 N m
		0 N		-4.7776 N m

Result Summary

Name	Minimum	Maximum
Volume	1510520 mm^3	
Mass	1.60115 kg	
Von Mises Stress	0.000607065 MPa	0.0390022 MPa
1st Principal Stress	-0.0190605 MPa	0.0269761 MPa
3rd Principal Stress	-0.0597022 MPa	0.00285344 MPa
Displacement	0 mm	0.00184957 mm
Safety Factor	15 ul	15 ul
Stress XX	-0.0267469 MPa	0.0205388 MPa
Stress XY	-0.0144453 MPa	0.00523953 MPa
Stress XZ	-0.00988623 MPa	0.00415888 MPa
Stress YY	-0.0517766 MPa	0.0138239 MPa
Stress YZ	-0.0101993 MPa	0.0143884 MPa
Stress ZZ	-0.0279285 MPa	0.0117996 MPa
X Displacement	-0.00167349 mm	0.0000216778 mm
Y Displacement	-0.000810552 mm	0.000091239 mm
Z Displacement	-0.000192697 mm	0.000195862 mm
Equivalent Strain	0.000000256044 ul	0.0000168179 ul
1st Principal Strain	-0.000000000891093 ul	0.0000108912 ul
3rd Principal Strain	-0.0000195749 ul	-0.000000173541 ul
Strain XX	-0.00000157398 ul	0.00000908718 ul
Strain XY	-0.00000889931 ul	0.00000322792 ul
Strain XZ	-0.00000609062 ul	0.00000256216 ul
Strain YY	-0.0000146922 ul	0.00000476515 ul
Strain YZ	-0.00000628352 ul	0.00000886431 ul
Strain ZZ	-0.00000392502 ul	0.0000057143 ul

Figures

Von Mises Stress

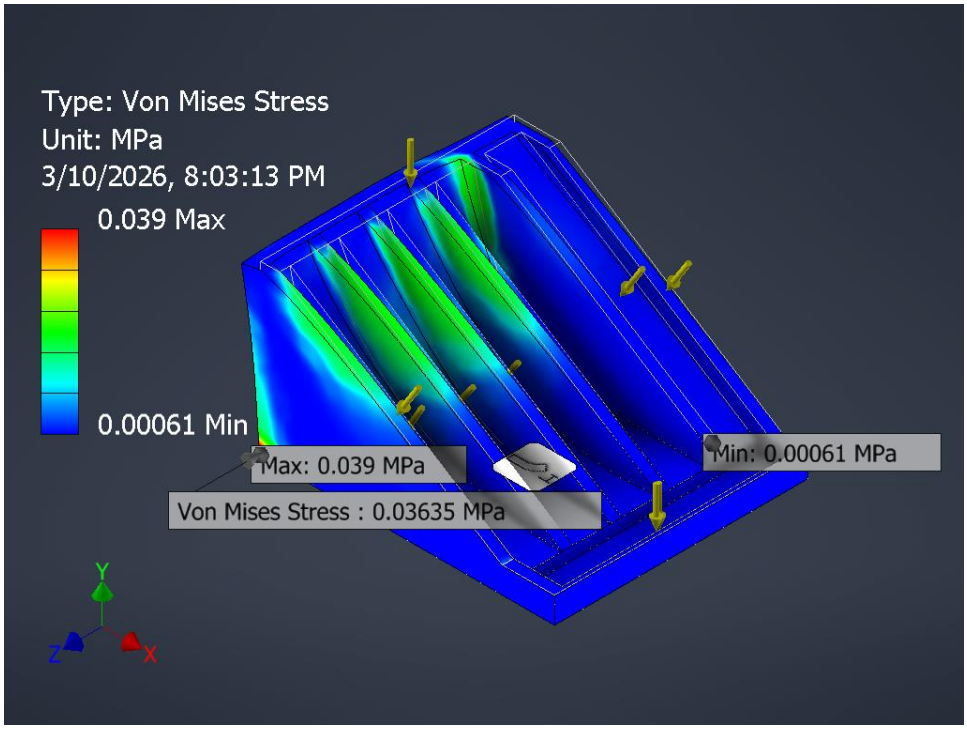

1st Principal Stress

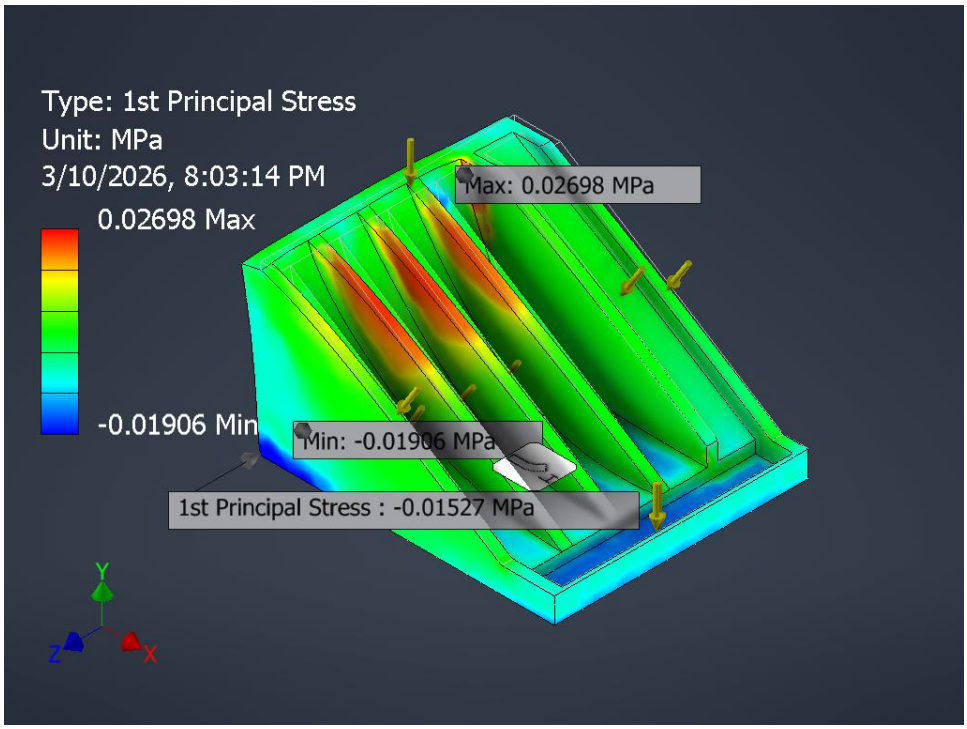

3rd Principal Stress

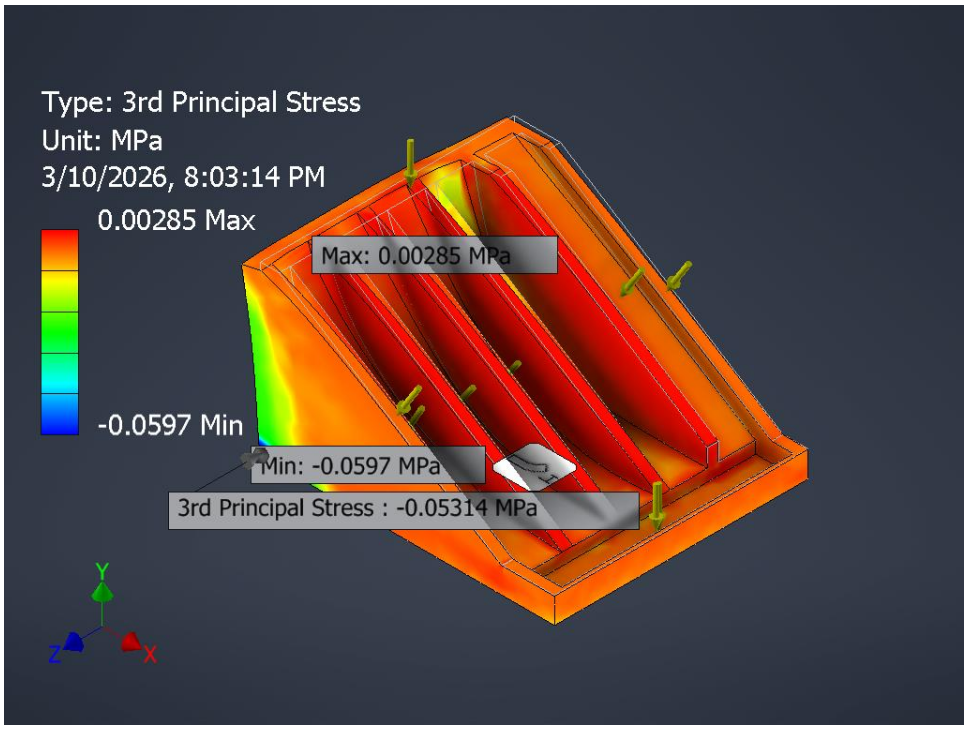

Displacement

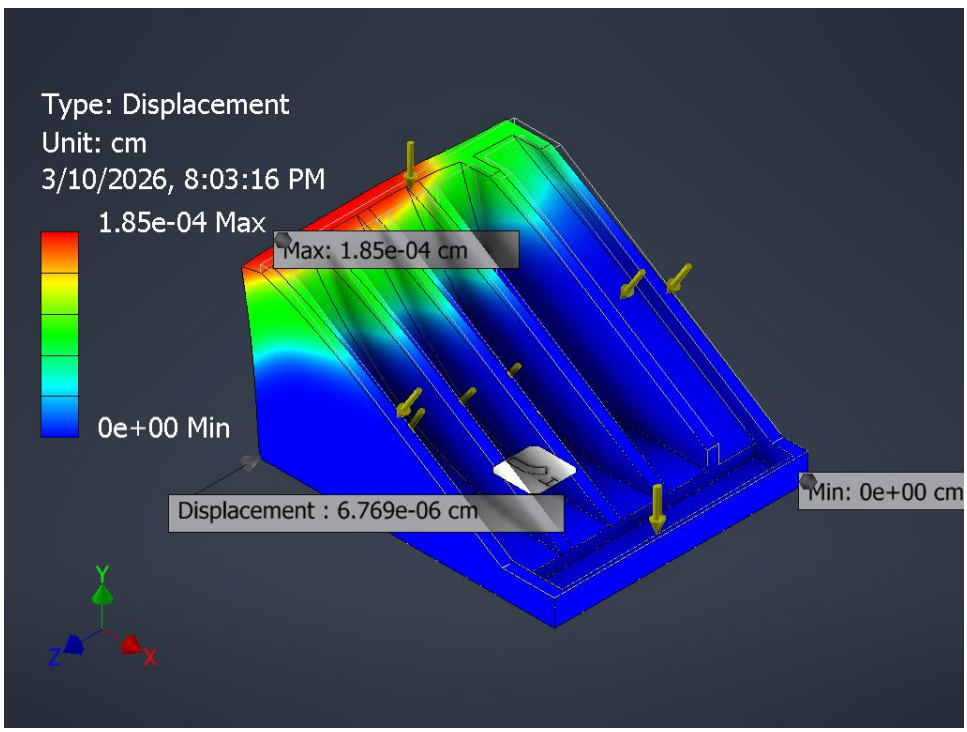

Safety Factor

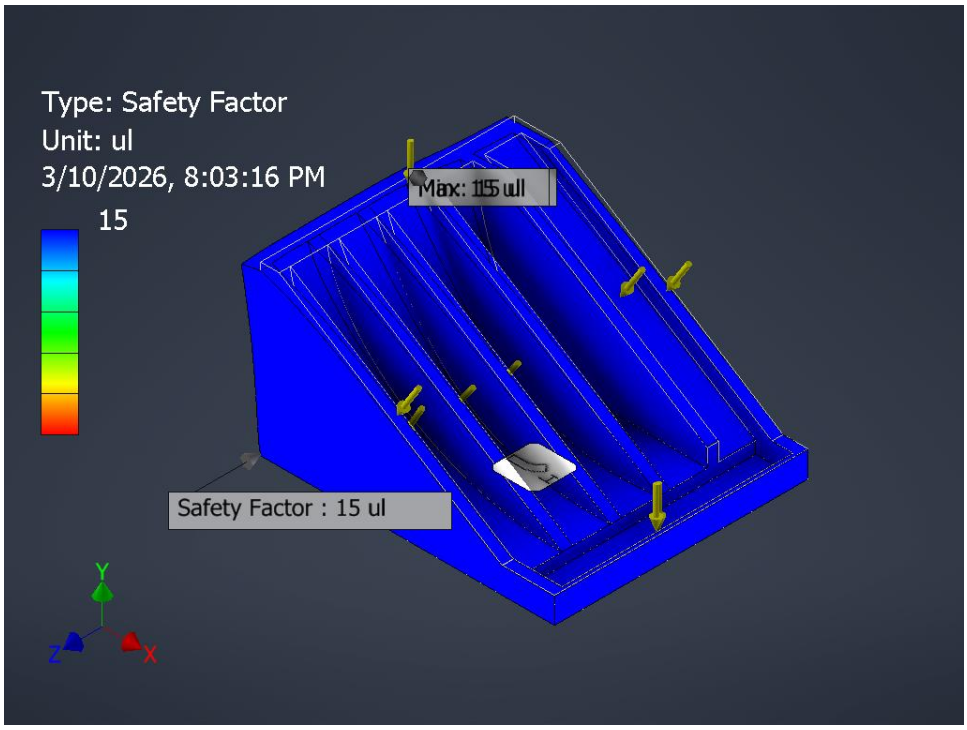

Stress XX

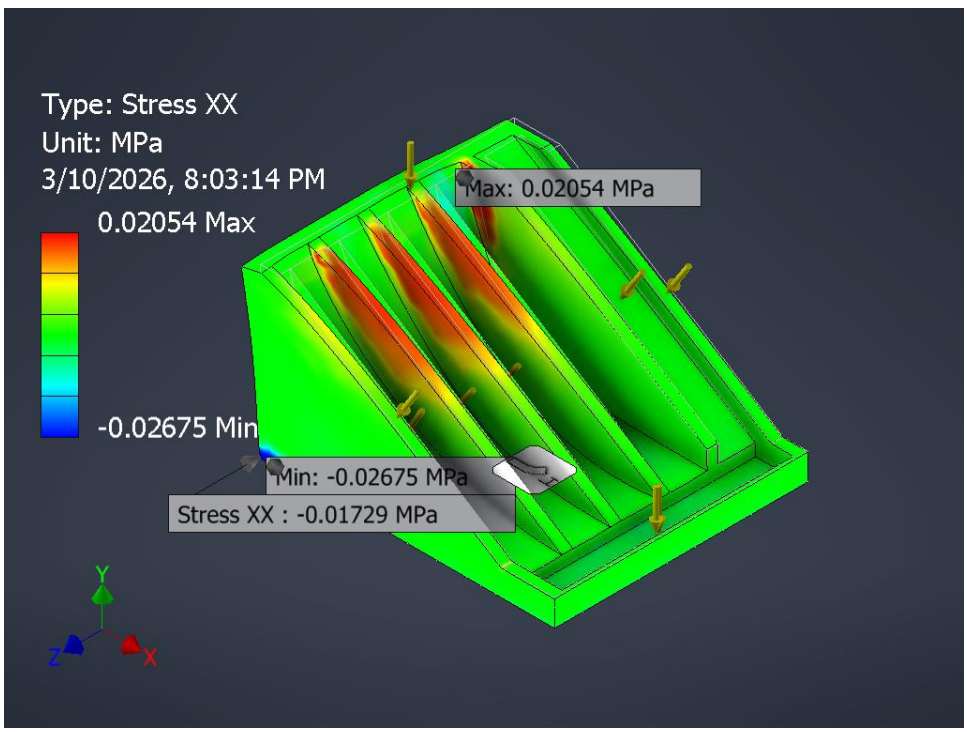

Stress XY

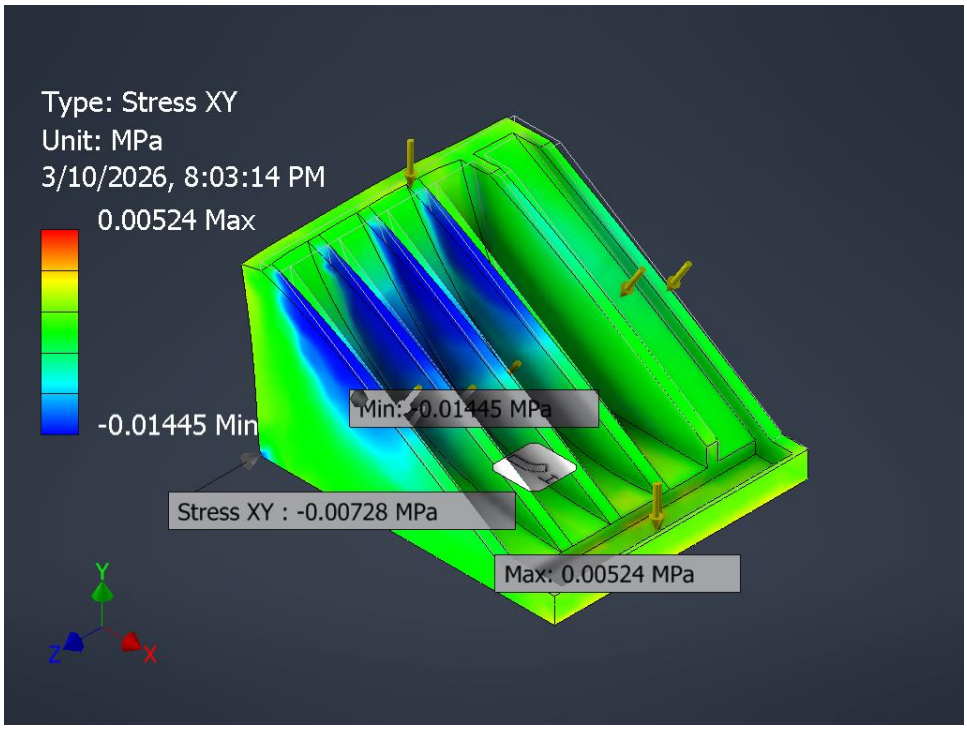

Stress XZ

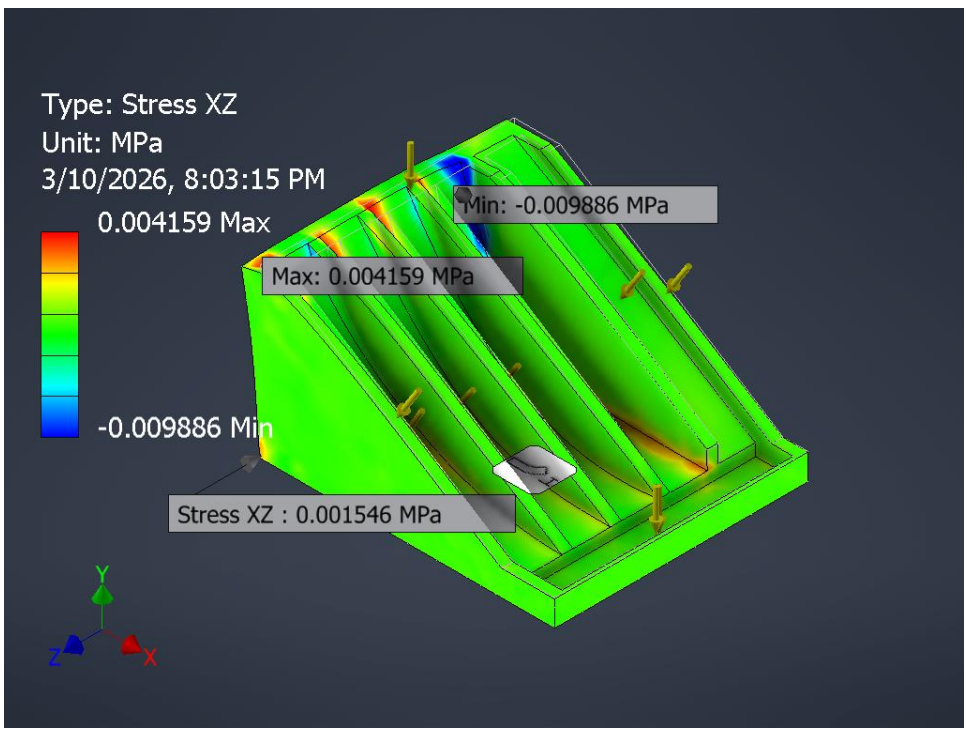

Stress YY

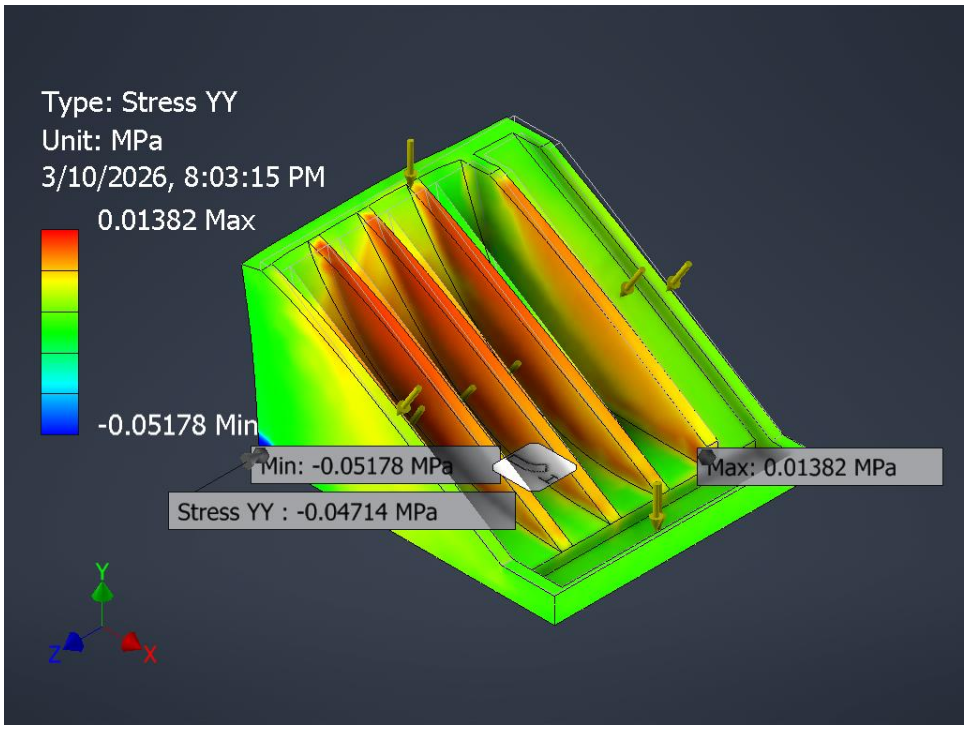

Stress YZ

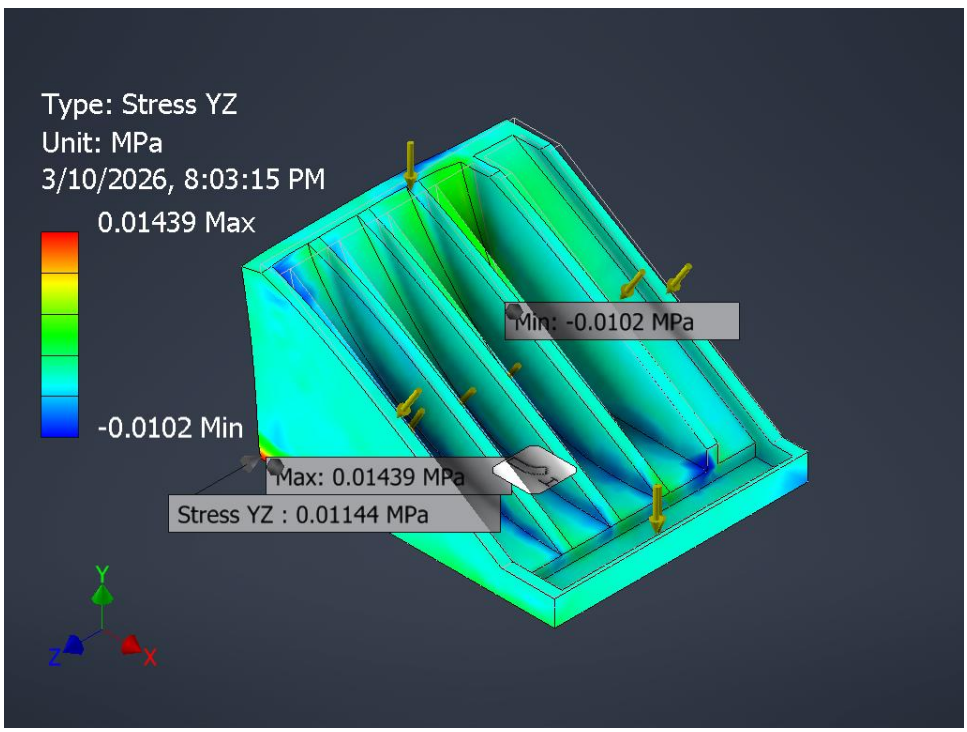

Stress ZZ

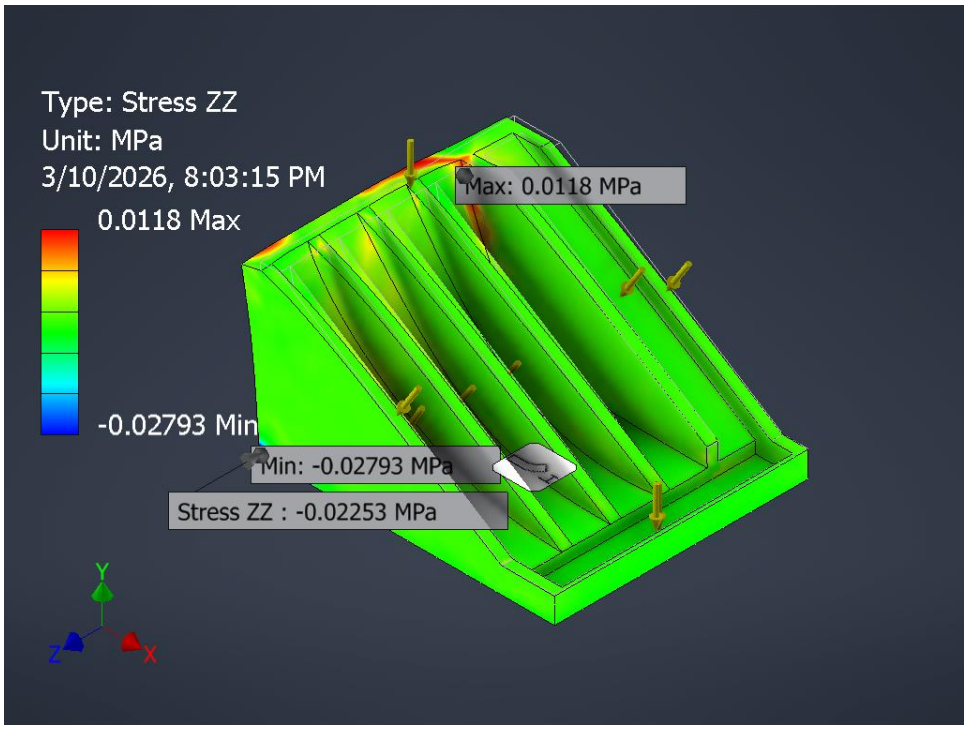

X Displacement

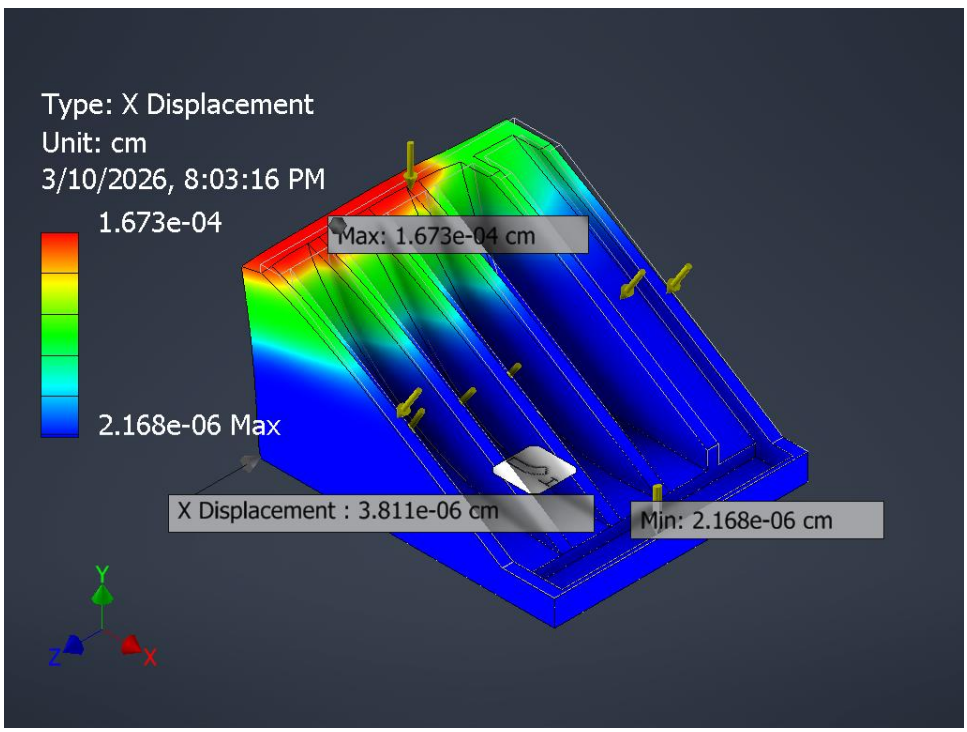

Y Displacement

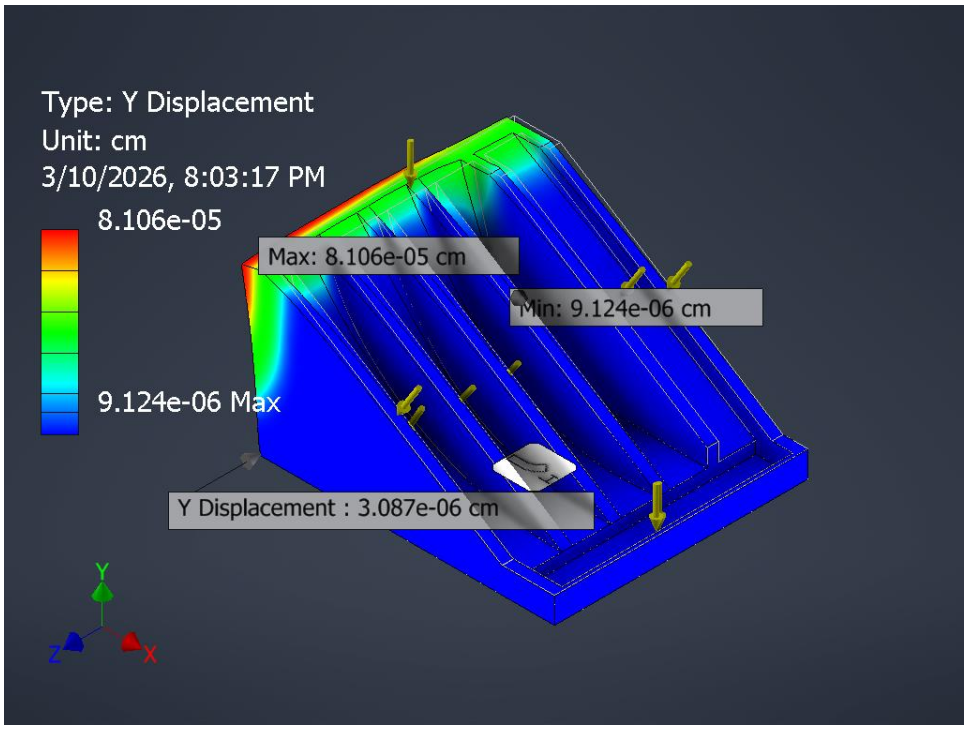

Z Displacement

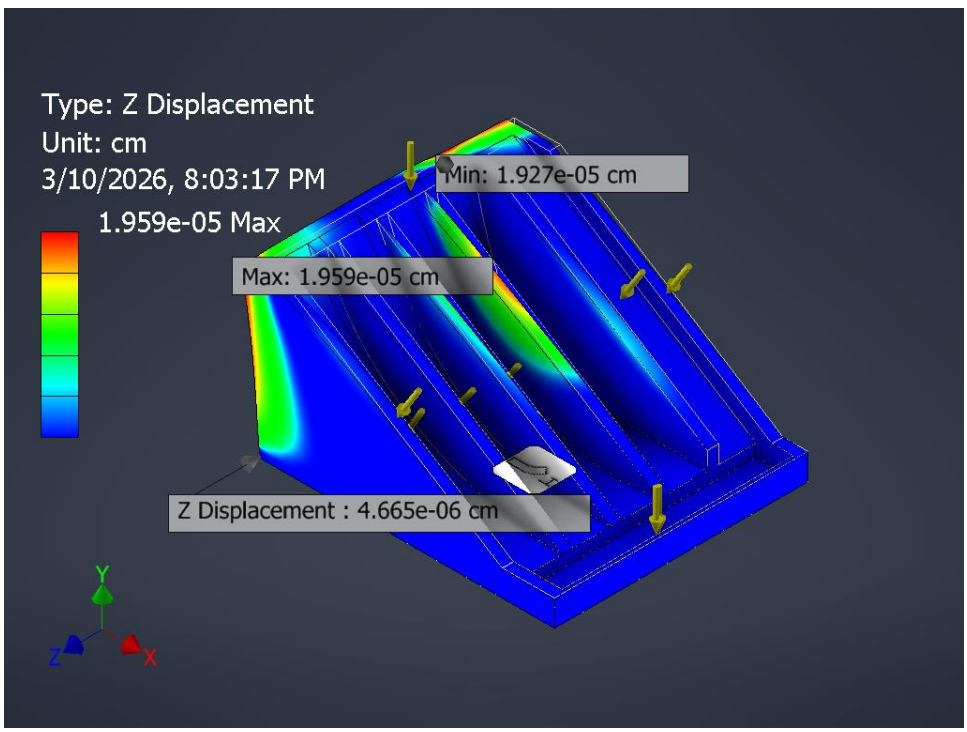

Equivalent Strain

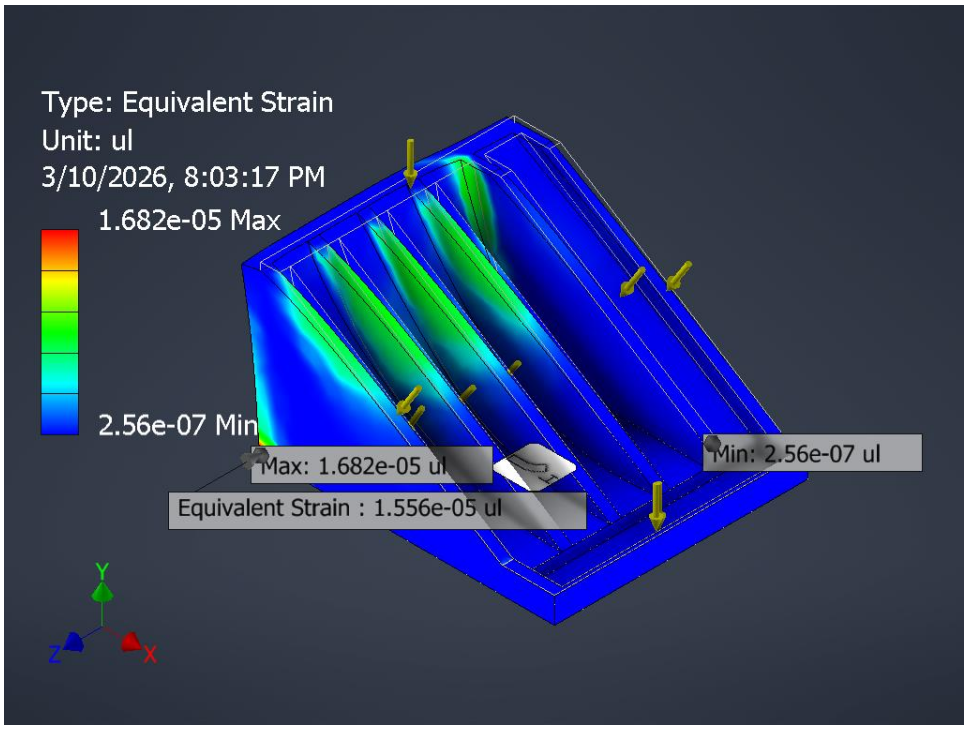

1st Principal Strain

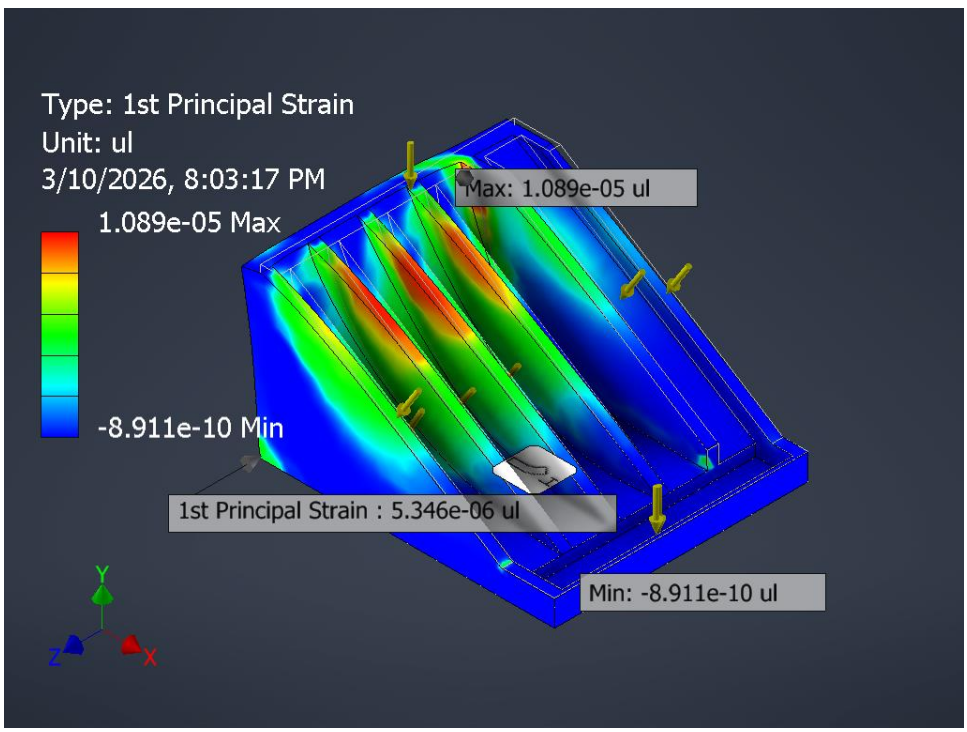

3rd Principal Strain

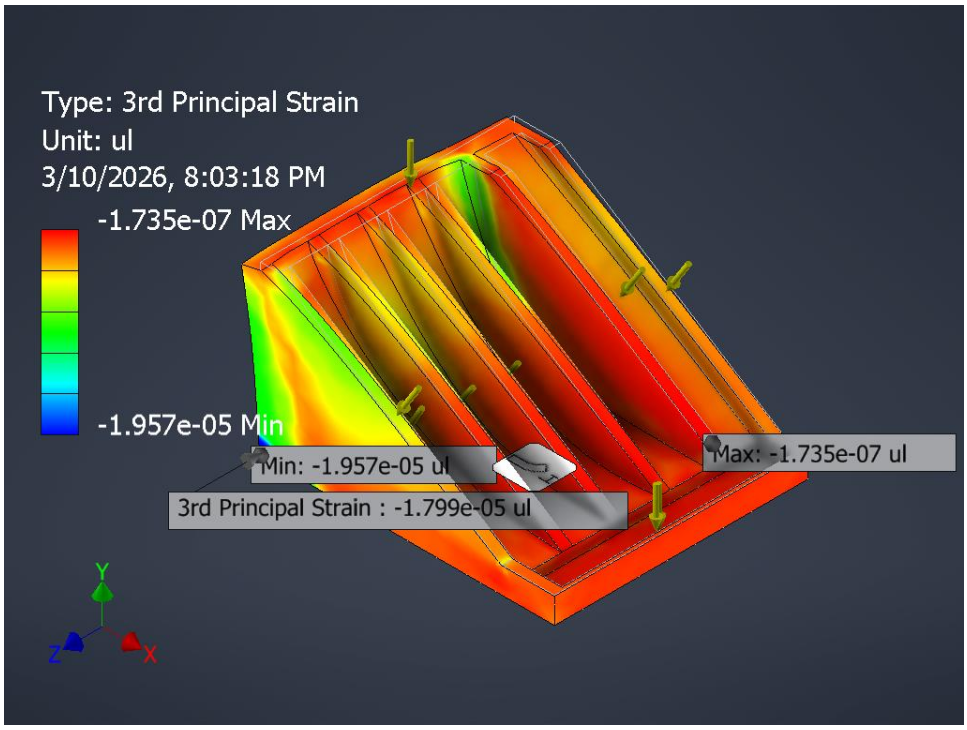

Strain XX

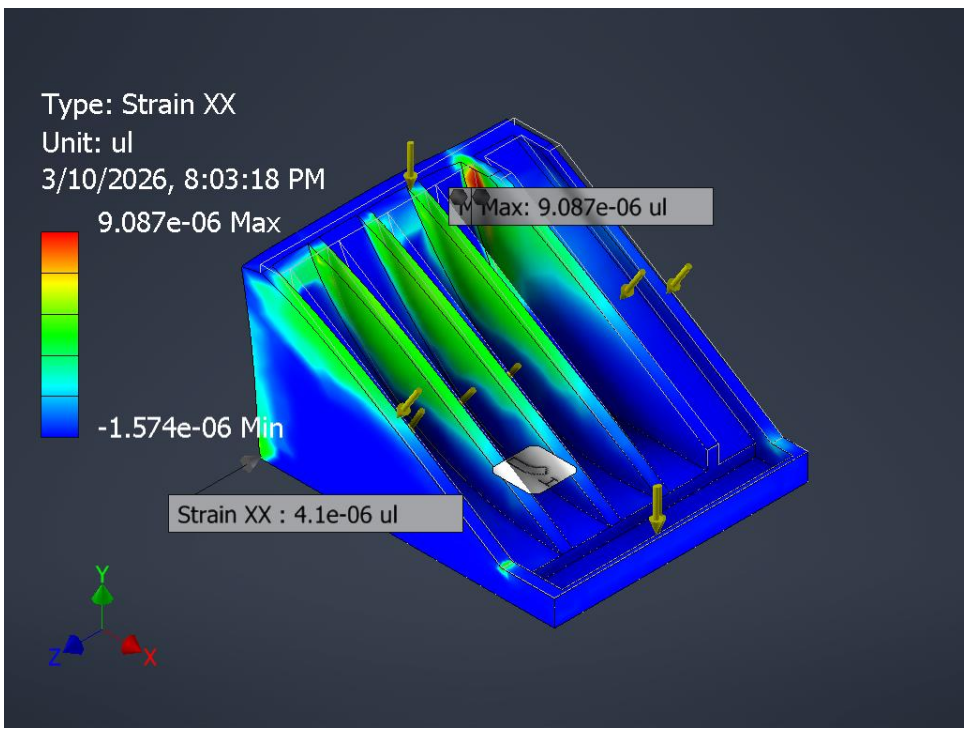

Strain XY

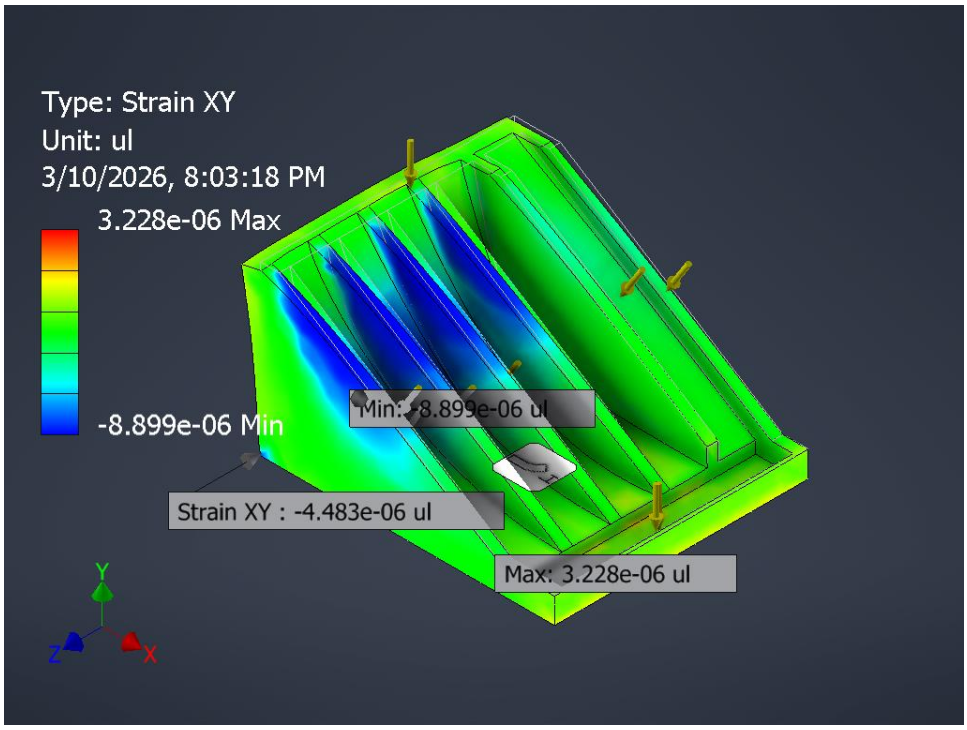

Strain XZ

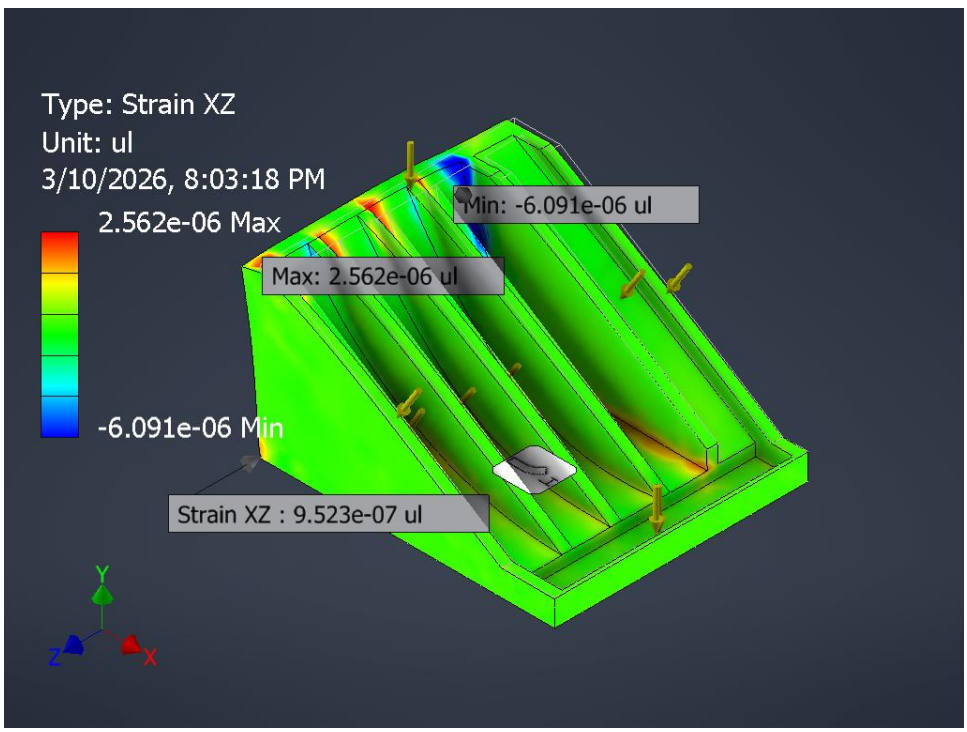

Strain YY

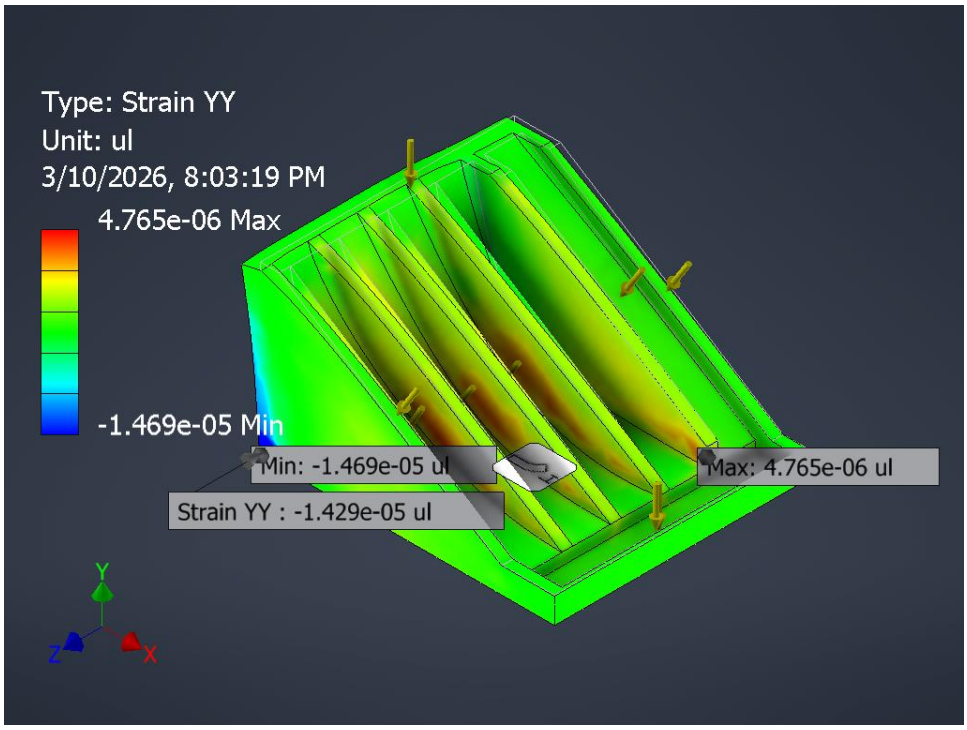

Strain YZ

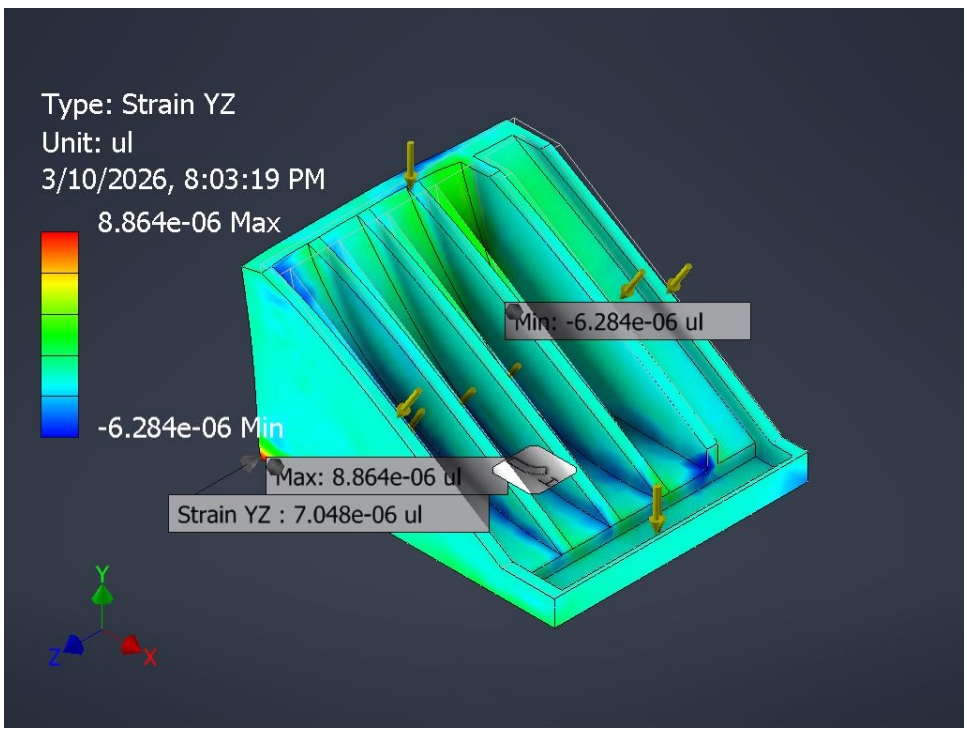

Strain ZZ

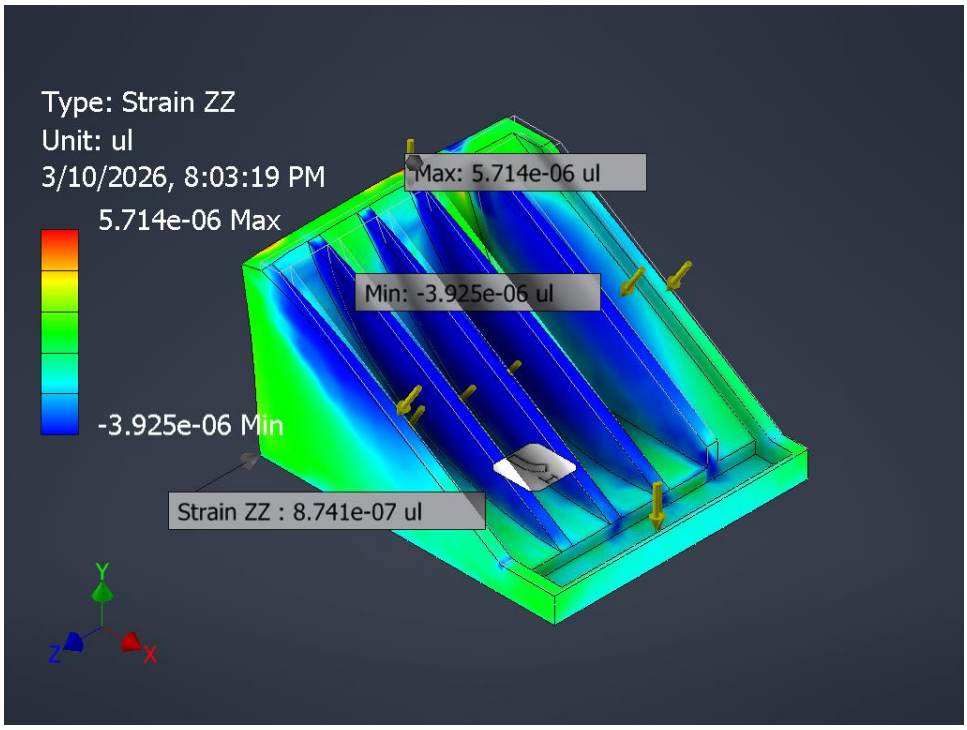
Type: Strain ZZ
Unit: ul
3/10/2026, 8:03:19 PM
5.714e-06 Max
-3.925e-06 Min
Max: 5.714e-06 ul
Min: -3.925e-06 ul
Strain ZZ : 8.741e-07 ul
Y
Z
X